KING

King Cloud

Assembly | User Guide

Two people are required for safe assembly

Opening Boxes:

DO NOT use a knife to open the packaging as you may damage your furniture.
Peel off the tape, then lift & separate the cardboard flaps to open.

Assemble your furniture by following the instructions below.

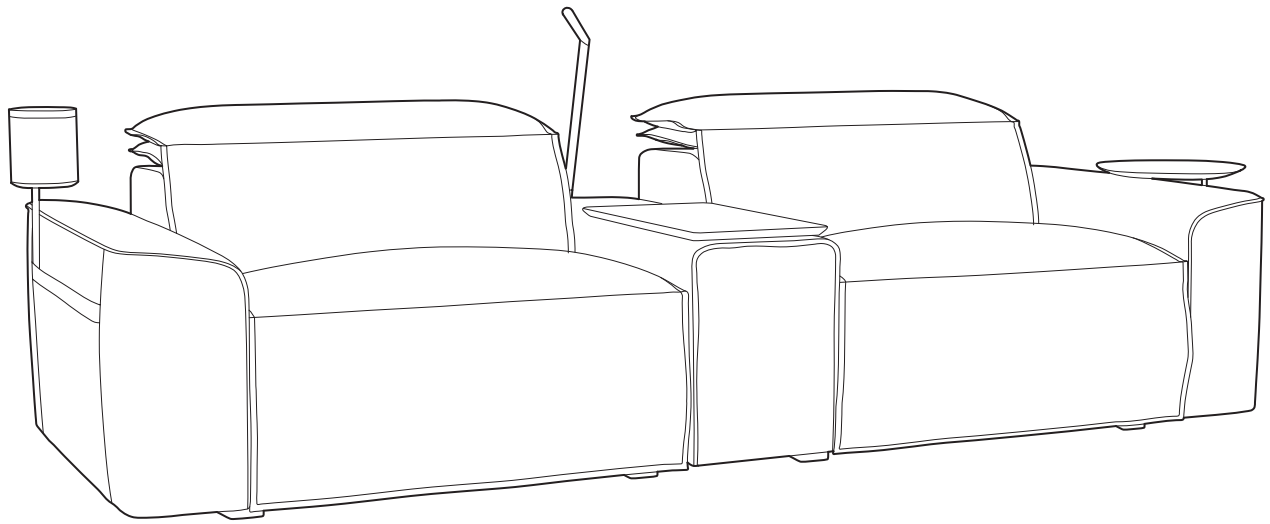

DT2026049-V1

Contents

Assembly 3
Accessories and Storage 6
Connecting to Power 7
Connecting to Battery Pack 8
Operation 10
Memory Positions 11
Frequently asked Questions (FAQ) 12
Warning 16

WARNING

Do not sit on footrest when in open reclined/extended position. **MAXIMUM LOAD 15kg (33lb).**

Always **RETRACT FOOTREST** prior to standing.

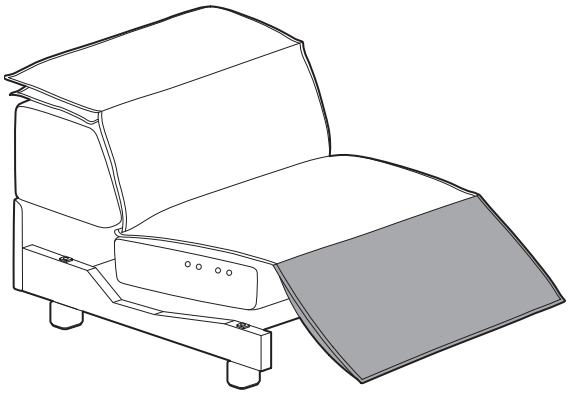

OBSTRUCTION DETECTION

If the recliner does not close, there may be an obstruction interfering with the safety section.

REMOVE OBSTRUCTION BEFORE FURTHER OPERATION

See the FAQ section on page 7 for more information about the obstruction detection safety feature.

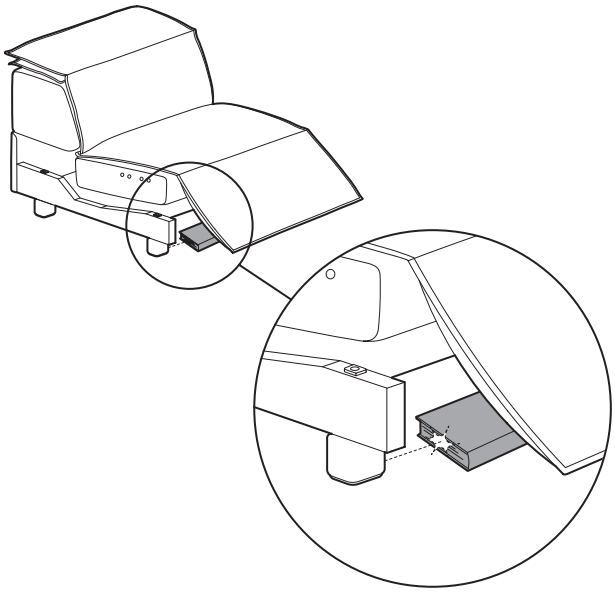

Chair and Arm Assembly

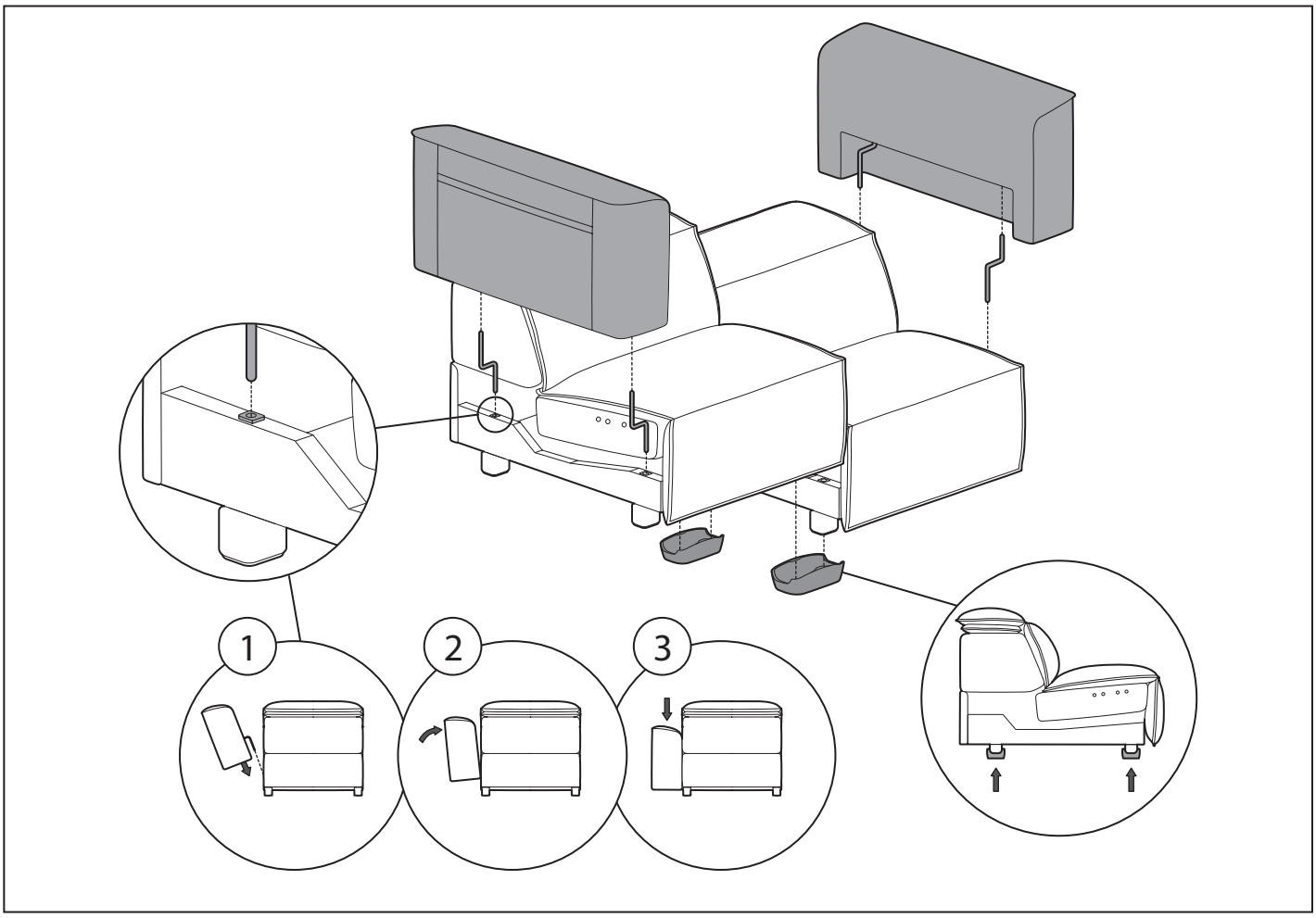

Media Console Assembly

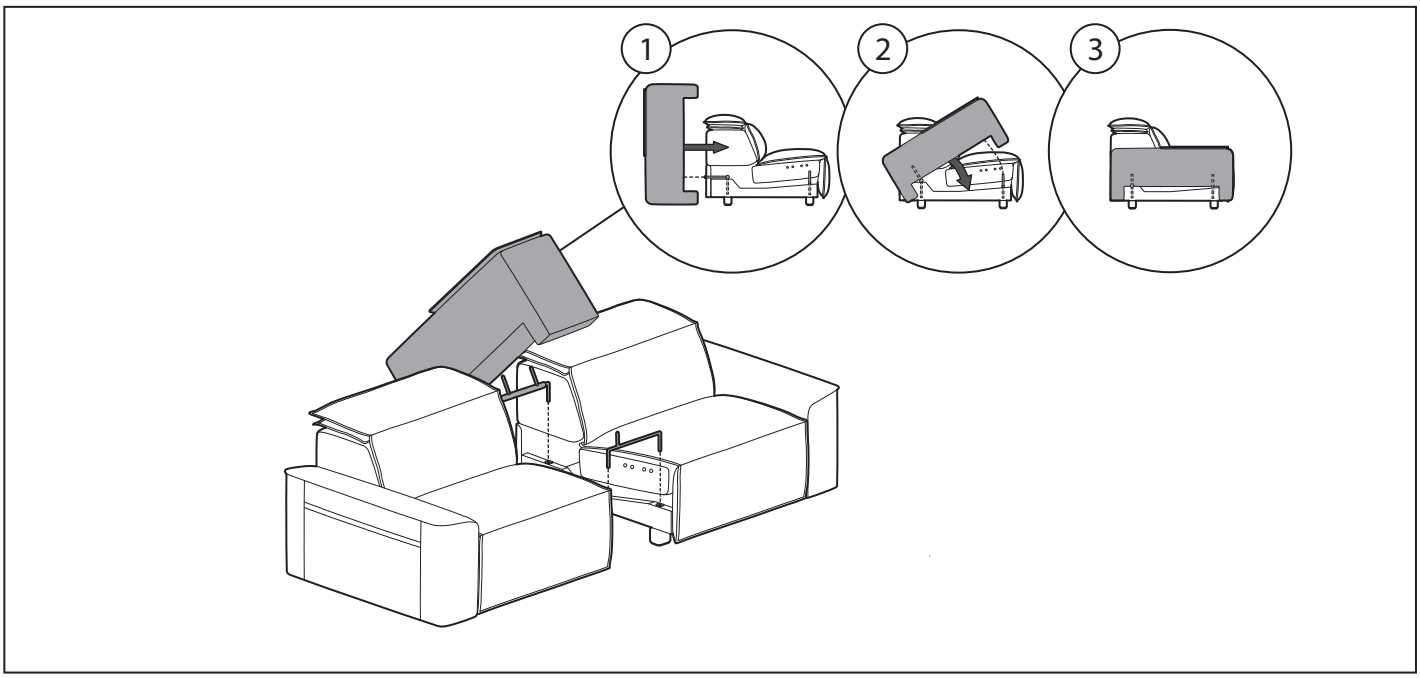

Corner Module Assembly

1

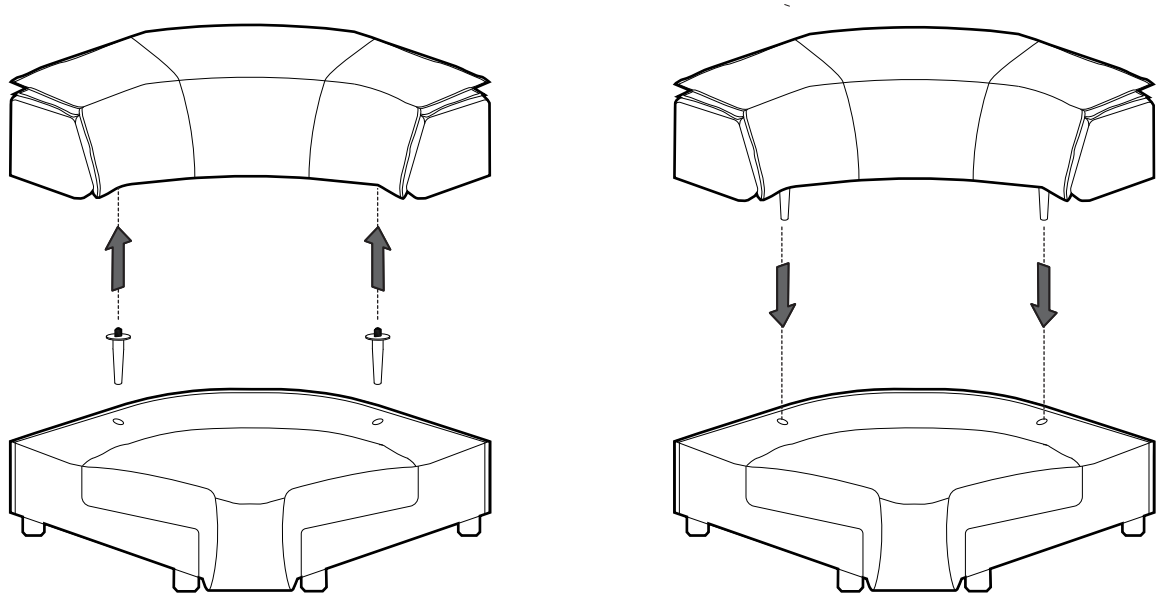

2

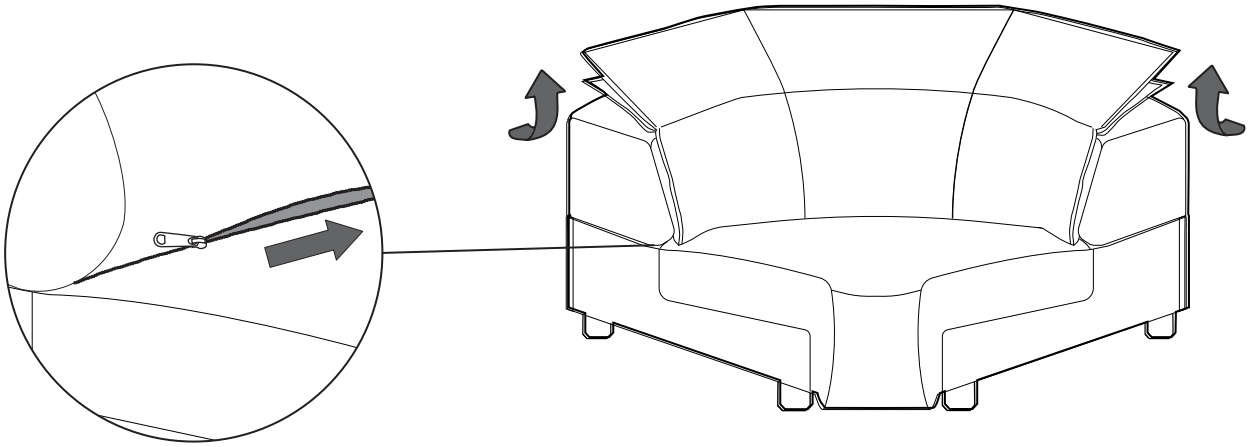

3

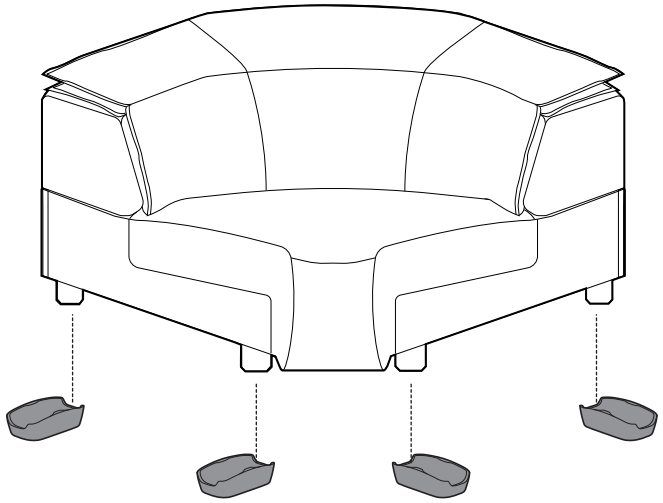

4

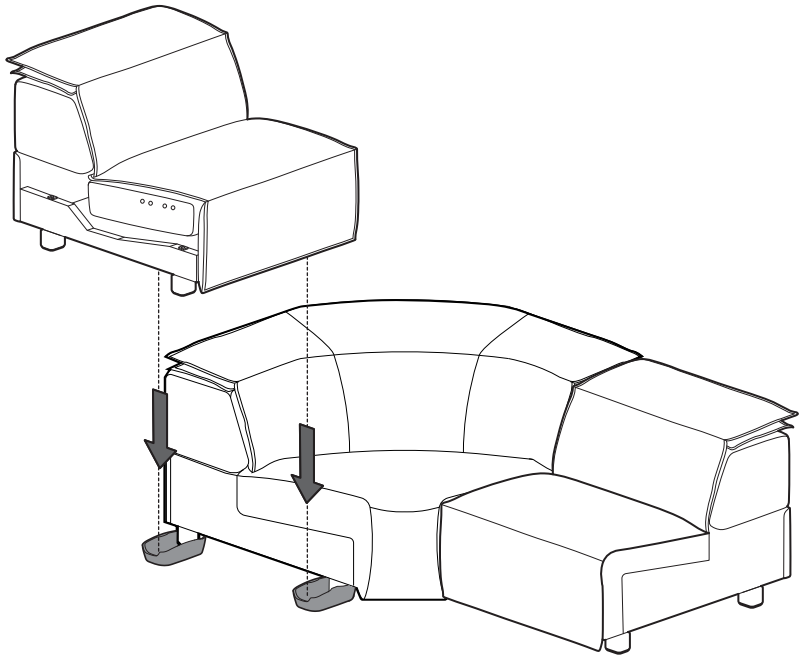

Accessories and Storage

INSTALLING ACCESSORIES

Refer to individual accessory package for assembly instructions.

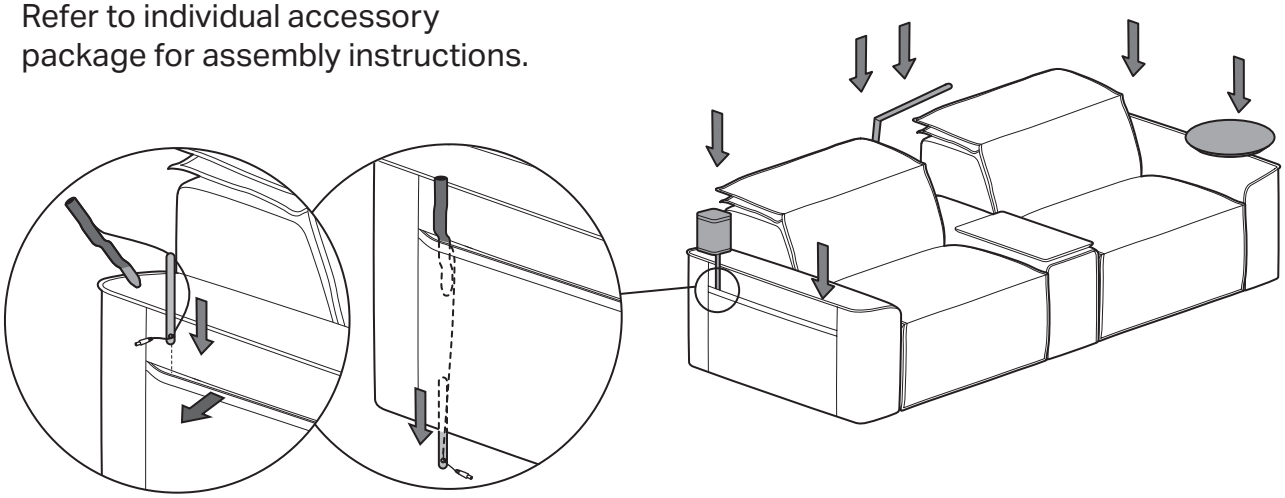

STORAGE POCKET

With dual magnets.

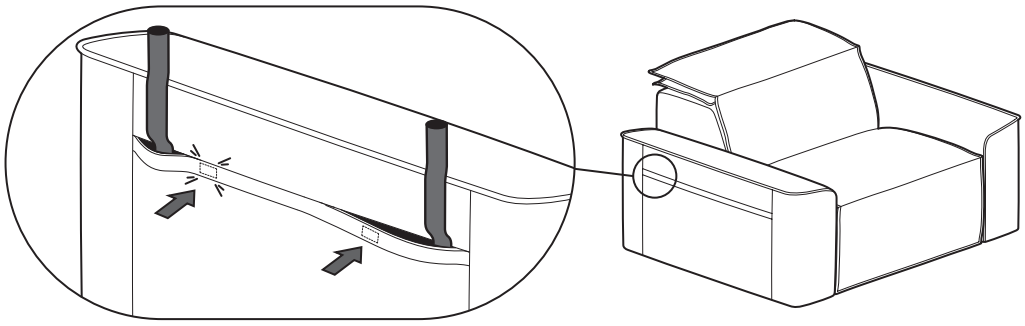

INSTALLING MEDIA CONSOLE SUBWOOFER

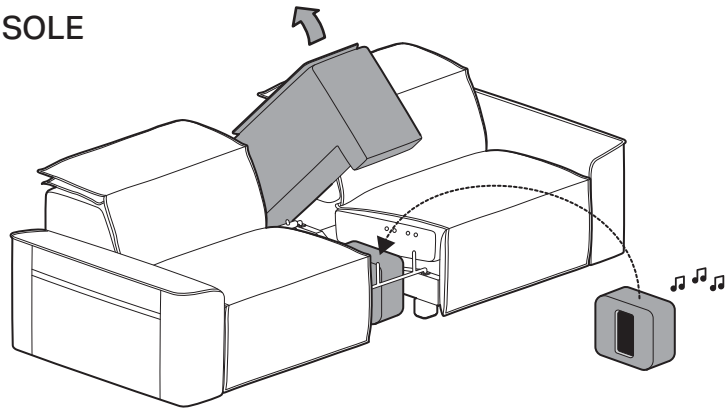

Connecting to Power

1

Do not connect King Cloud to power until the arms are assembled and modules connected.

Every recliner must be connected to its own power supply.

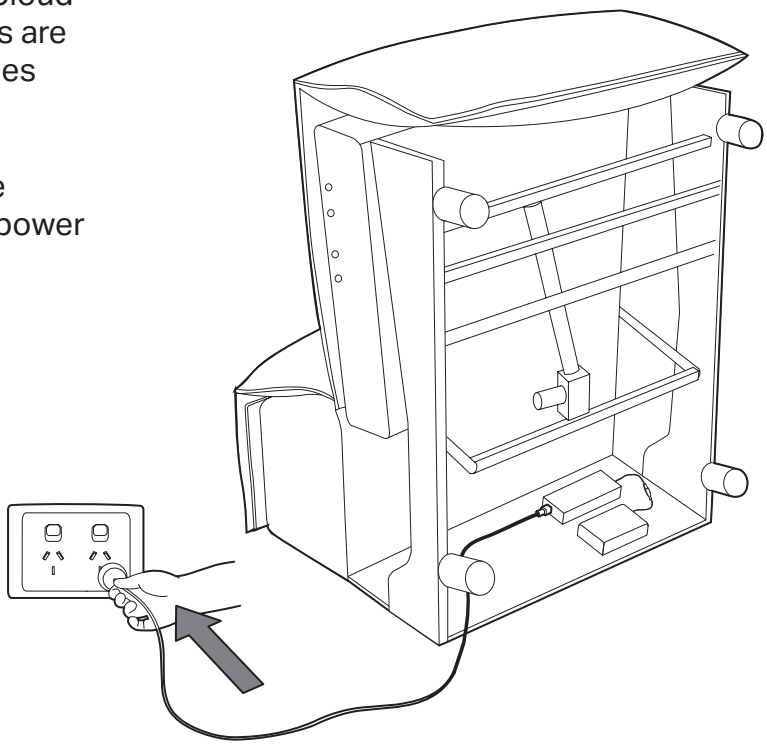

2

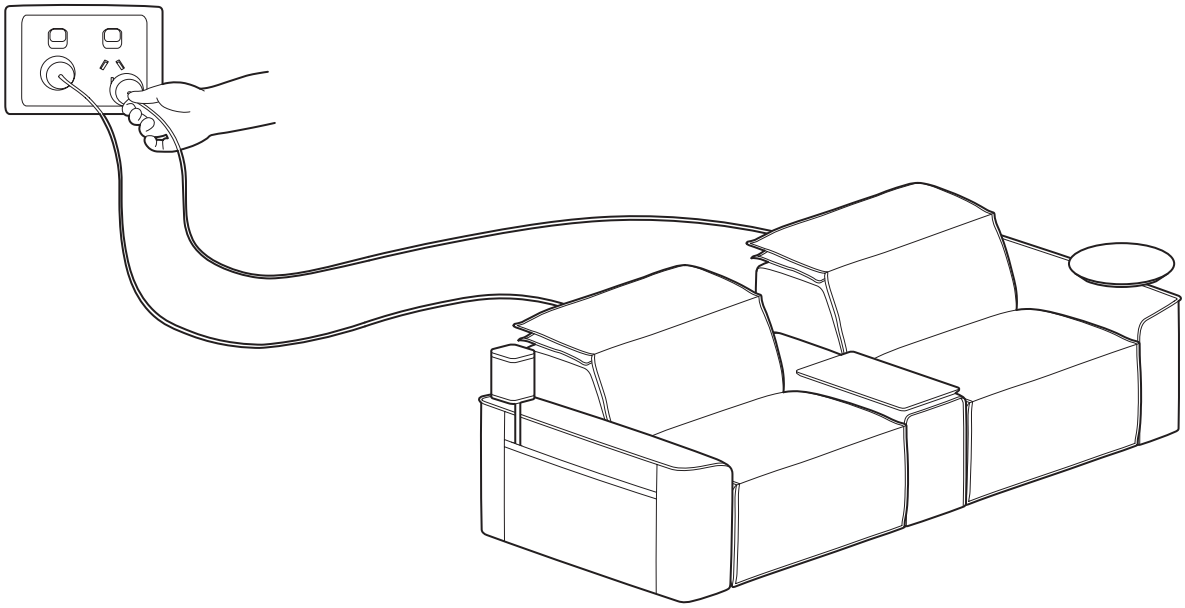

Connecting to Battery Pack

1

DISCONNECT FROM POWER

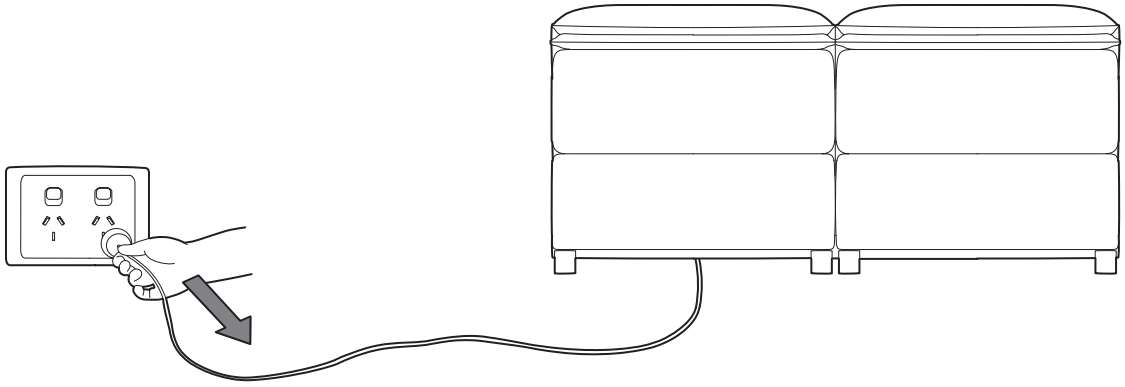

2

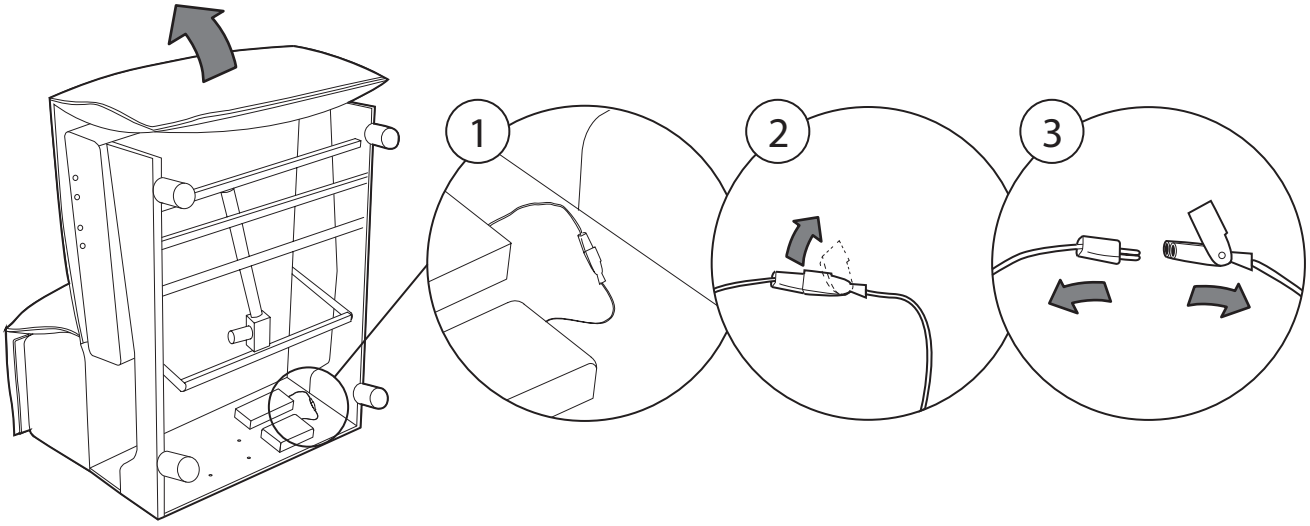

3

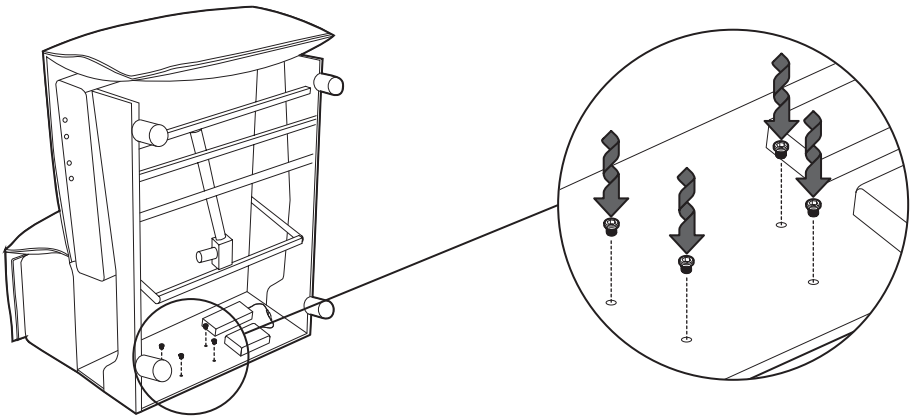

4

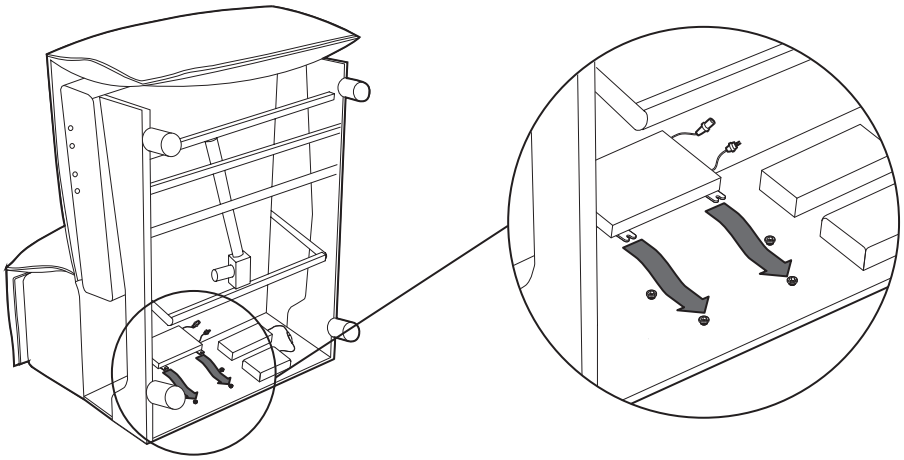

5

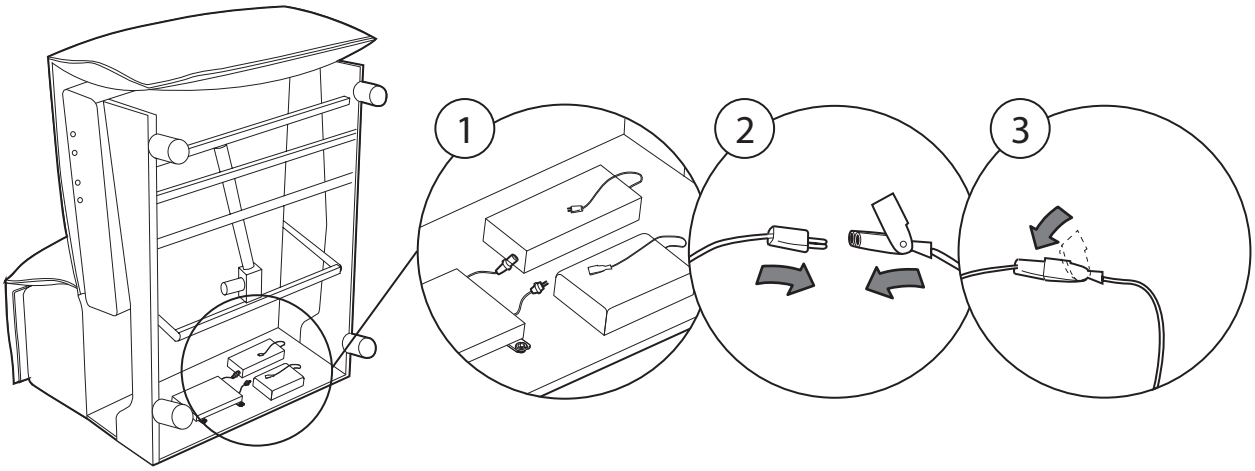

6

CHARGING BATTERY PACK

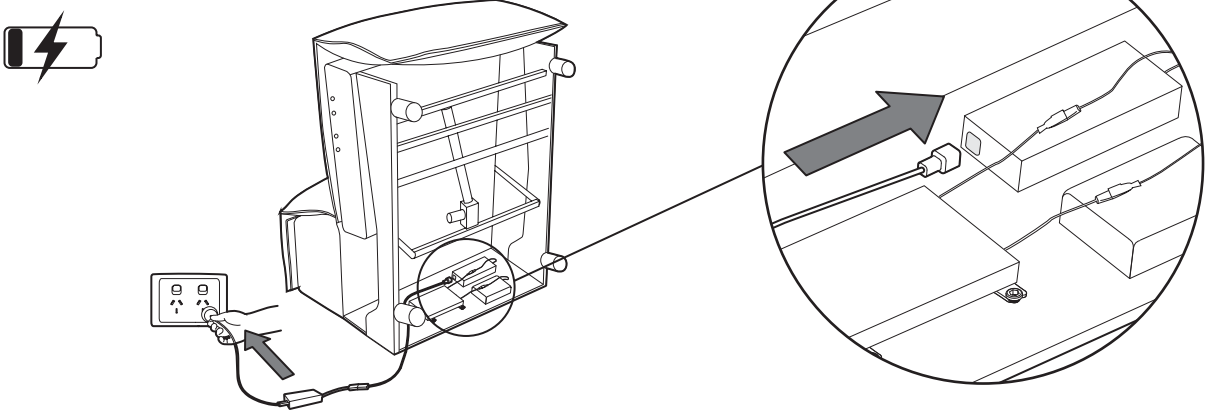

Operation

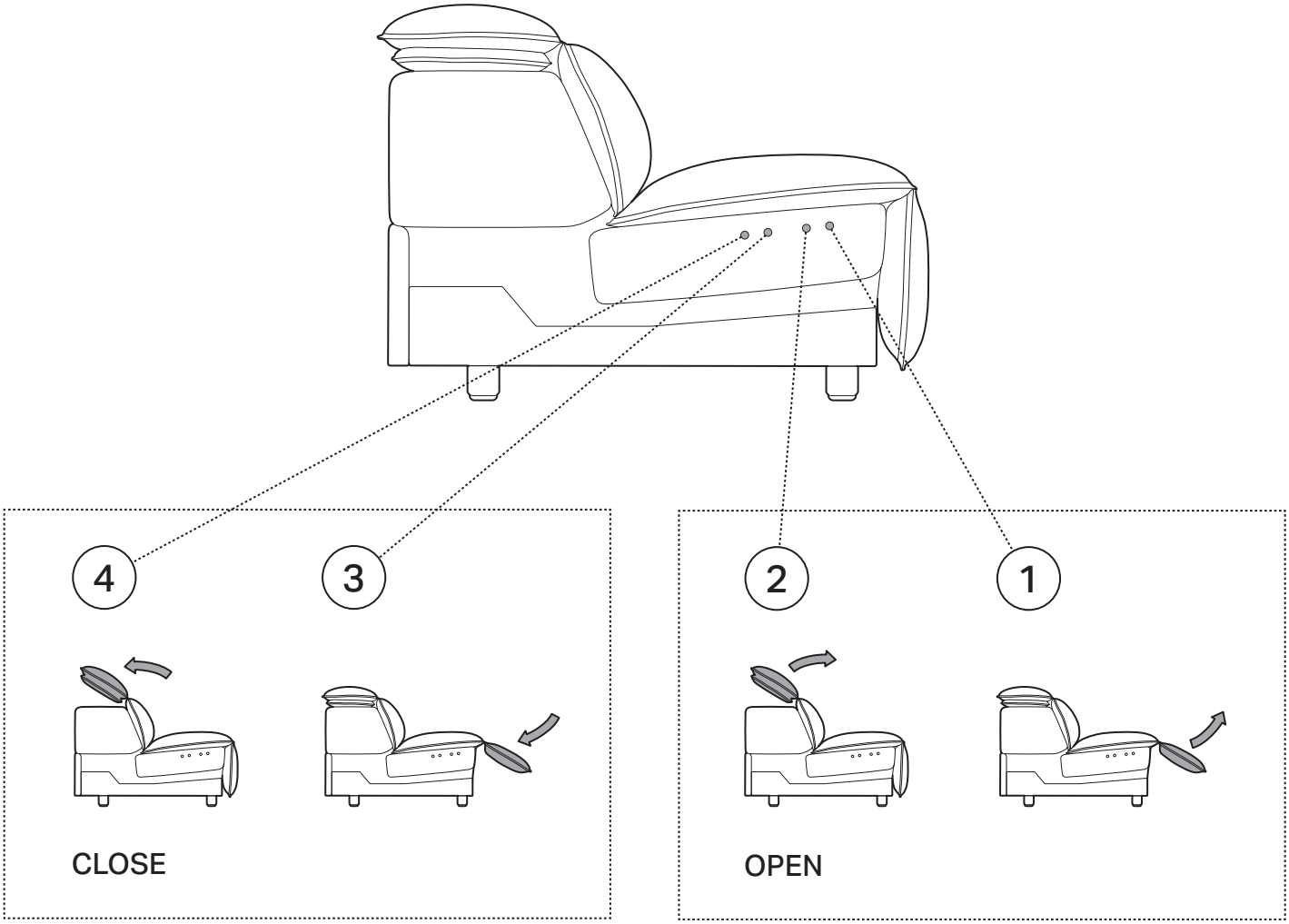

AUTOMATIC CLOSE

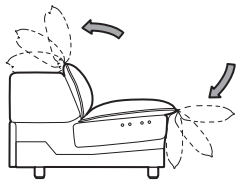

Important:
This should always be completed every time the power supply is connected or interrupted.

Automatic Close:
Swipe backwards across all buttons.

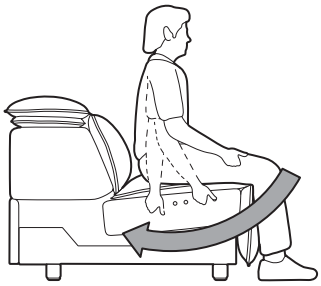

Memory Positions

SET MEMORY POSITIONS

Manually adjust to desired position.

Memory Position 1:
Press and hold buttons 1 and 3 for 8 seconds.

1 + 3 8 sec.

Memory Position 2:
Press and hold buttons 2 and 4 for 8 seconds.

2 + 4 8 sec.

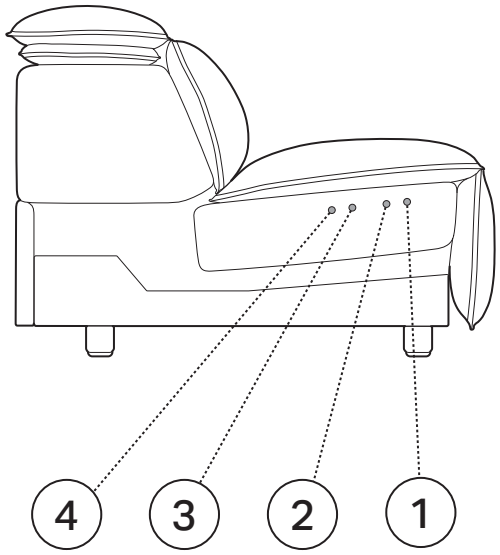

RECALL MEMORY POSITIONS

Memory Position 1:
Swipe forward once.

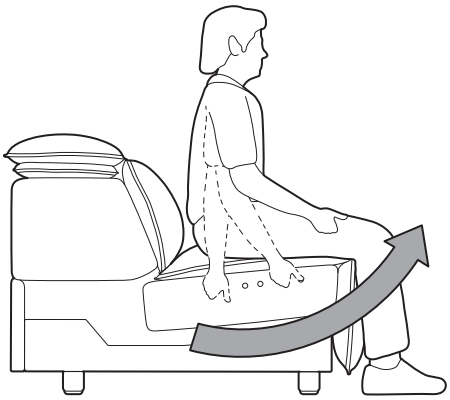

Memory Position 2:
Swipe forward twice.

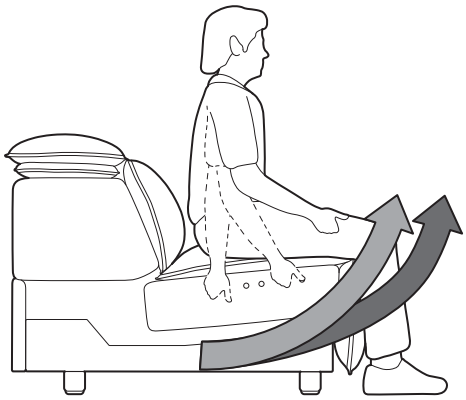

Frequently Asked Questions (FAQ)

Q Why doesn't my recliner module respond when a button is touched?

1 **Your recliner module may not be connected to power. Follow these steps:**

1. Ensure the power cable is plugged into the power outlet and the outlet is switched ON.
2. Ensure the power cable is connected to the power supply and the LED on the power supply is illuminated.
3. Ensure the extension power cable is connected to the power supply.
4. Ensure the extension power cable is connected to the rear of the recliner module.
5. If the recliner module still doesn't respond when you touch a button continue below.

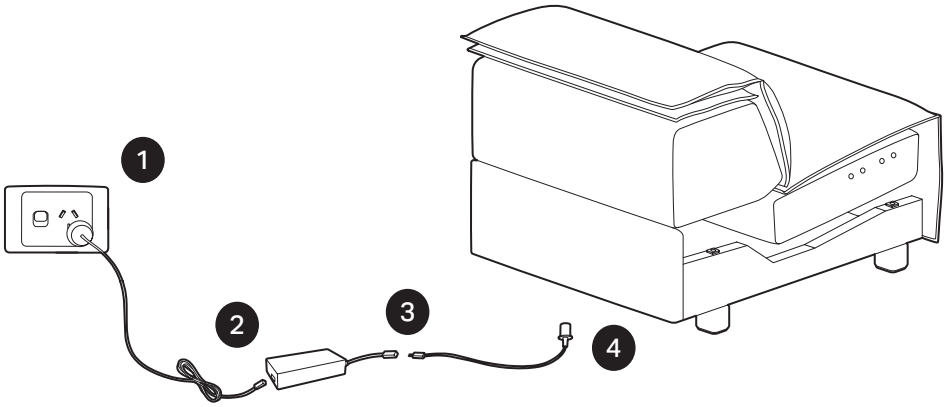

2 **Your power supply may have overheated. Follow these steps:**

1. Turn power OFF at the power socket, unplug power cable and wait for 15 minutes.
2. Re-connect power cable and turn power ON at the power socket.
3. Check that the light on the power supply is illuminated.
4. If the recliner module still doesn't respond when a button is touched, contact King Customer Care.

Q Why aren't the seams on my recliner modules sitting straight?

For an enhanced comfort experience the King Cloud uses a soft multi-layered cushioning system.

The soft nature of these layers means that the seams on one recliner module may not perfectly align with the seams on another recliner module. If there is a significant misalignment between recliner modules, they may be sitting at different heights.

See the following FAQ for more details.

Q Why does one recliner module sit higher or lower than another recliner module?

The legs of your recliner module may not be fully inserted into the King Cloud Joiner. Follow these steps:

1. Open footrest of each recliner.
2. Check that the legs of the sofa are fully inserted into the King Cloud Joiner.
3. Firmly push the module seat downwards if any legs are not fully inserted into the joiner.
4. If the recliner module is still sitting higher or lower than another module please contact: King Customer Care.

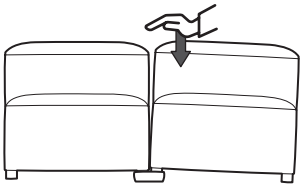

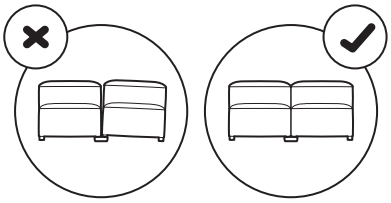

Q Why won't the footrest of my recliner module close?

1 **The footrest on your recliner module will not close if the safety system detects an object under the footrest. Follow these steps:**

1. Remove any objects from underneath the footrest such as toys or books.
2. If the footrest still doesn't close continue below .

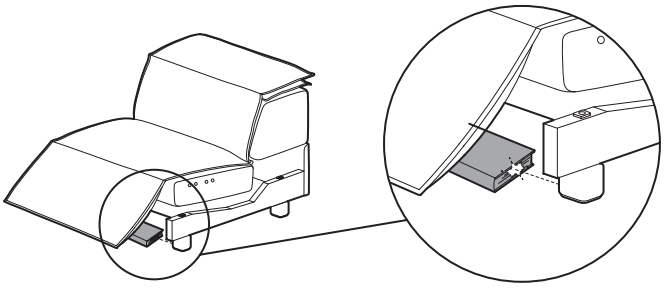

2 **Your recliner module may be sitting on a thick rug which is activating the safety system, follow these steps:**

1. Check that there are no folds or lumps in the rug causing high spots under the footrest. These areas may be detected by the footrest safety system.
2. If your recliner module's footrest still doesn't close, contact King Customer Care.

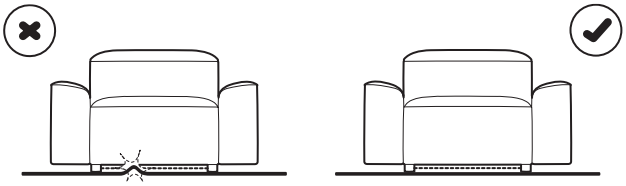

3

The King Cloud Premiere has a plastic protector over the arms of the recliner mechanism to cover potential pinch points in the moving components of the recliner. The plastic protector on the side of the mechanism may have come loose and is being detected by the safety system.
Follow these steps:

1. Turn power OFF at the power socket for each recliner module.
2. Check that the two pins of the protector are securely attached to the recliner mechanism. If this protector has come loose and is hanging down, it may be activating the chairs safety system and will need to be re-attached. For more information contact King Customer Care.

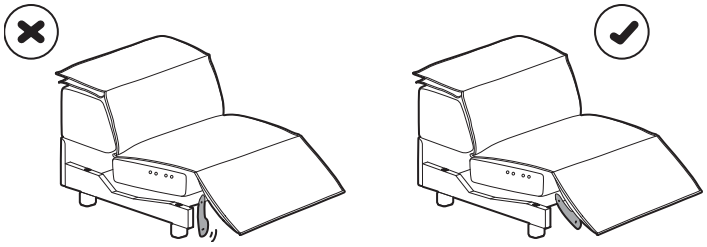

Overriding the Obstruction Detection Safety Feature

If the footrest is stuck in the open position, it can be manually operated by overriding the footrest safety of the recliner module. **Please note:** this overrides the obstruction detection safety feature.

Important: Always check for obstructions before overriding the obstruction detection safety feature.

To Override The Obstruction Detection Of The King Cloud Premiere:

1. Press & hold button 3 for 10 seconds.
2. Obstacle detection function will now be overridden. Continue to hold button 3 to close the footrest.

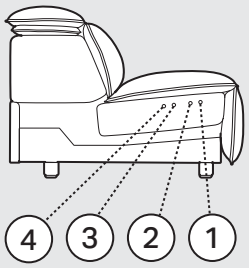

Q Why can't my recliner module's memory positions be programmed or recalled?

The power to your recliner module may have been interrupted and therefore the home position needs to be reset. Follow these steps:

1. Touch and hold buttons 3 and 4 for 15 seconds. NOTE: It is important to touch the buttons for the full 15 seconds.
2. If your memory positions still cannot be set or recalled, contact King Customer Care.

Q Why do my recliner modules have gaps between them?

Your recliner module is brand new and needs to be used in order to wear in the soft cushioning. After several weeks of use any gaps between your recliner modules will reduce. If the gaps don't reduce over time, continue below.

Your recliner modules may not be correctly joined together. Follow these steps.

1. Turn power OFF at the power socket for each recliner module.
2. Refer to the assembly section of this booklet for instructions on how to correctly join your King Cloud Premiere modules.
3. Turn power ON at the power socket for each recliner module.
4. If your recliner modules still have gaps between modules, contact King Customer Care.

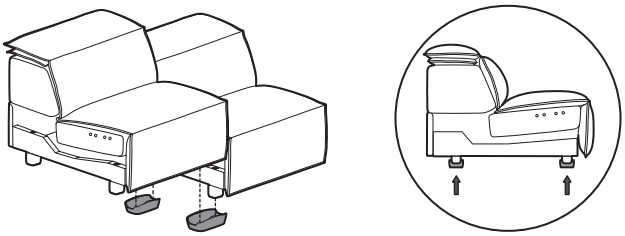

Q Why is my leather recliner module making a rubbing noise during operation?

During operation a rubbing noise may be present as the leather surfaces of your recliner modules slide past one another. Applying King-Care Leather Conditioner will not only ensure the soft, luxurious feel of your leather is maintained, but will allow the surfaces to move freely over each other and reduce any rubbing noises.

Apply King-Care Leather Conditioner to:
1) The sides of the lumbar
2) The sides of the seats
3) The sides of the media consoles
4) The insides of the arms

NOTE:
If you do not have King-Care Leather Conditioner, contact King Customer Care.

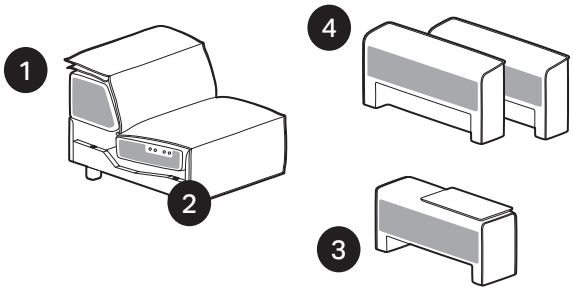

Q Why does my leather recliner module have slight wrinkles?

The King Cloud Premiere is a luxurious, soft cushioned design which has been engineered for comfort. The multi-layered cushioning system combined with the natural stretch of high quality, soft, European leathers will result in some slight wrinkling of your recliner module covers – this is perfectly normal.

WARNING

Important:
Read the below instructions carefully before assembling and using this product.

IMPORTANT: ALWAYS FULLY RETRACT THE FOOTREST BEFORE SITTING IN OR GETTING OUT OF THE RECLINER.

To avoid damage to your recliner, the reclining function should only be operated when you are seated in the recliner. Any open footrests, which have a 15kg (33lb) weight limit, must be closed before getting out of or into the seat. Sliding forward over the footrest to get out of the seat or getting into a fully reclined seat may cause damage to the recliner mechanism and can result in the sofa tipping forward in extreme cases. This built-in tipping point was specifically designed to preserve the integrity of the mechanism if too much pressure is placed on it and to avoid permanent damage. Damage caused by improper use of Recliners will not be covered under Warranty.

- Do not allow children to play with or on the unit or allow children to use the unit unsupervised. Serious injury or death could occur if head or body parts are trapped within or under the unit while it is being operated.
- Ensure children and pets are at a safe distance from the unit when operating the electric mechanism / moving parts.
- Keep hands and feet clear of moving parts at all times.
- Each unit should be operated only by the person sitting on it.
- Only use the electronic mechanism to operate the unit. Do not attempt to open the footrest by pulling on it.
- Always leave the unit in an upright and closed position when not in use to avoid children and pets crawling into any open cavities and becoming trapped under moving parts.
- Always disconnect the electrical cord attached to the unit from power before cleaning or moving the unit or when not in use for an extended period.
- Ensure the unit is clear of walls, furniture and other obstructions that may interfere with a clear path for operation. Ensure that no objects are left under the unit to avoid interference with the internal mechanisms.
- Do not use the unit if it is wet, in water, or around water or any liquid. Keep liquids away from unit. If liquids are spilled on the unit, disconnect from power immediately and wait until the spill is completely dry before reconnecting to power. Do not handle the plug or electric controls with wet hands.
- This product is for indoor residential use only.
- Use only a slightly damp cloth to clean metal parts of the mechanism. Before cleaning ensure the furniture has been disconnected from its power source.
- Ensure electrical wires are free from obstruction and not twisted or trapped. If any wires are damaged, turn off power supply and call King-Care.
- Do not attempt to disassemble or service the internal mechanism, motor or other parts. No customer serviceable parts inside.